Design Project Proposal Form

500W Simple Inverter using NE555 Timer IC

Submitted by

Sourodeep Saha (RA2311052010012)
Pranav Teckchandani (RA2311052010025)
Sai Sathwik (RA2311052010031)

Semester – IV
Academic Year: 2024–25

In the partial fulfilment of the course

21ECC222L

ANALOG AND LINEAR ELECTRONIC CIRCUITS

DEPARTMENT OF ELECTRONICS AND COMMUNICATION ENGINEERING

SRM Institute of Science and Technology (Deemed University)
(under section 3 of the UGC act, 1956)
SRM Nagar, Kattankulathur – 603203, Chengalpattu District, Tamilnadu.

DEPARTMENT OF ECE
College of Engineering and Technology, SRM IST
SRM Nagar, Kattankulathur – 603203, Kancheepuram District, Tamilnadu

BONAFIDE CERTIFICATE

This document is to certify that the project report titled 500W Inverter System using NE555 Timer IC, BC547 Transistor, IRFZ44 MOSFETs and Center-Tapped Transformer represents the bona fide work undertaken by SOURODEEP SAHA (RA2311052010012), PRANAV TECKCHANDANI (RA2311052010025) and SAI SATHWIK (RA2311052010031) from the Department of Electronics and Communication Engineering. This project work is in fulfilment of the course 21ECC222L – Analog and Linear Electronic Circuits Laboratory in the IV Semester of the B. Tech-ECE-Cyber Physical Systems program for the academic year 2024-25. The students have conducted this work under my supervision and guidance. All material sourced from external references has been appropriately acknowledged.

DATE: 08.05.2025	**LAB INSTRUCTOR**	**YEAR COORDINATOR / ACADEMIC ADVISOR**
	(Dr. AVM. Manikandan)	(Dr. Diwakar R. Marur)

Department seal

ACKNOWLEDGEMENTS

We sincerely thank Dr. AVM. Manikandan, Associate Professor, Department of Electronics and Communication Engineering, for his invaluable mentorship, continuous support, and expert guidance throughout the development of our 500W Inverter System project. His deep technical knowledge and constructive feedback played a vital role in the successful execution of this work.

We also express our appreciation to the Department of Electronics and Communication Engineering at SRM Institute of Science and Technology for providing the essential laboratory facilities, equipment, and technical support necessary for the design, simulation, and implementation of our project.

Our heartfelt thanks go to Dr. Diwakar R. Marur, Year Coordinator and Academic Advisor, for his administrative guidance and consistent encouragement. We are also grateful to the laboratory assistants for their assistance in procuring components and handling the testing equipment.

Lastly, we acknowledge the authors of various research papers, textbooks, and online resources that greatly enhanced our understanding of Analog circuit design principles.

April / May 2025

Sourodeep Saha (RA2311052010012)
Pranav Teckchandani (RA2311052010025)
Sai Sathwik (RA2311052010031)

Abstract

This project involved developing a 500W Inverter circuit based on input power supply of 12V 2A from Battery charged through Solar Panel during daytime. This inverter incorporated a NE555 Timer IC in astable mode of frequency 50 Hz set by 10K, 15K resistors and 1 µF capacitor to develop a continuous square wave of frequency 50 Hz matching the household Alternating Current frequency. The capacitors were used for filtering and stabilizing signals, while the resistors limited the current and set the timing intervals. The 1000 µF capacitor smoothened the DC input to prevent ripple from affecting the output. The BC547 transistor amplified square wave signal from NE555 Timer IC and driven the Gate terminals of four IRFZ44 MOSFETs in Push and four IRFZ44 MOSFETs in pull configuration allowing for efficient switching of MOSFETs based on the timer's output signal. The eight IRFZ44 MOSFETs are arranged in a push-pull configuration to convert the DC voltage into a high-current square wave signal. The MOSFETs alternate the current flow through the primary winding of the center-tapped transformer. The transformer received the high-current square wave signal from the MOSFETs and steps it up to 220V AC voltage. The 12-0-12 V center-tap transformer boosted the 12V DC to approximately 220V AC.

This efficient, simple and reliable robust Inverter system is developed to be utilized as a supplementary power system in modern day households in urban places in times of power surge when a power outage take place or for operating basic electric appliances in rural areas. The inverter system had been tested using 12V 2A Battery and AC load condition of incandescent bulb and Mobile Phone charging adapter which was found to function satisfactorily. The system circuit was shown to reliably output 220V AC in times of requirement. Clean and Green renewable energy solutions are on the rise in present scenario and our inverter system circuit feeding off 12V 2A from Battery recharged through solar panel can prove to be beneficial in low cost electric power system units for rural and urban households alike.

TABLE OF CONTENTS

ACKNOWLEDGEMENTS		iii
ABSTRACT		iv
LIST OF FIGURES		vi
1.	**INTRODUCTION**	1
1.1	Background and motivation of the project	1
1.2	Importance of the project topic	1
1.3	Overview of the project	1
1.4	Objectives of the project	2
2.	**LITERATURE REVIEW**	3
2.1	NE555 Timer IC in Inverter Circuits	3
2.2	Transistors and MOSFET Drivers	3
2.3	Transformer Selection and Function	4
2.4	Practical Implementations and Functions	4
3.	**SYSTEM DESIGN AND ARCHITECTURE**	5
3.1	Hardware Design	5
3.2	Hardware Required	5
3.3	Explanation of Circuit	6
4.	**SIMULATION AND ANALYSIS**	7
	Schematic and Discussion	7
5.	**RESULTS AND DISCUSSION**	8
6.	**CONCLUSION**	9
	REFERENCES	10
	APPENDICES	11

LIST OF FIGURES

Figure 1 Breadboard Prototype of the Inverter System

Figure 2 Schematic of the Inverter System

CHAPTER 1

INTRODUCTION

1.1 Background and motivation of the project

Modern day households in skyscrapers and buildings or shopping complexes or hospitals do not undergo power outages even when the whole city is undergoing a power failure. We have the intriguing question as to how these systems of inverters keeps the modern day infrastructure going on without any halt. Inspired by such everyday tech, we wanted to explore the world of power systems and electric power supply units in inverters and create something that demonstrates how these systems work using simple electronic components.

1.2 Importance of the project topic

500W Inverter system is applicable in rural places where DC power supply from Solar Panel can be stored in battery array which can then be converted to AC current for operating basic Electric appliances while this can also be upscaled to keep normal procedures going on at the Hospitals in times of power-outage. This project solidifies and strengthens our practical understanding of the Inverter system and application of Timer ICs, Transistors and MOSFETs. This project demonstrates how everyday technology can be built from scratch in a simple and educational way.

1.3 Overview of the project

DC supply from 12V 2A Battery is converted to Square Wave of frequency 50 Hz using NE555 Timer IC, BC547 amplifies the square wave signal to threshold Gate voltage of IRFZ44 MOSFET, MOSFETs in Push-Pull configuration switches voltage to 12-0-12V Center-Tapped transformer which boosts the voltage to 220V AC. This system supplements power supply in times of power outage or on-the-go AC power supply.

1.4 Objectives of the project

1. To design, build and implement a simple 500W Inverter System.
2. To convert DC voltage from 12V 2A Battery to square wave of frequency using NE555 Timer IC.
3. To amplify Square wave signal voltage to IRFZ44 MOSFET Gate voltage.
4. To alternate DC supply voltage using high switching frequency of IRFZ44 MOSFET fed to 12-0-12V Center-Tapped transformer to convert to AC and boost the signal.
5. To understand the basic principle of operation behind Push-Pull Configuration of the MOSFETs and CE Amplification action of BC547 BJT Transistor.

CHAPTER 2
LITERATURE REVIEW

This project oversees and explores development of 500W inverter circuit utilizing NE555 Timer IC, BC547 Transistor, IRFZ44 MODFETs and a Center-Tapped transformer to convert 12V 2A Battery DC output supply to 220V AC supply for operating common electric appliances. This approach leverages concept of NE555 Timer IC in Astable vibration mode, square-wave tuning using RC circuits, BC547 transistor in amplification mode in Common-Emitter (CE) Mode, IRFZ44 MOSFETs in parallel increasing current handling capacity, 8 IRFZ44 MOSFETs in push-pull configuration accounting for high frequency switching operation, Center-tapped 12-0-12V Transformer boosting and stepping up 12V DC to 220V AC This literature review aims to provide a comprehensive understanding of the key components and concepts involved in this project.

2.1 NE555 Timer IC in Inverter Circuits

The NE555 timer IC is a versatile component widely used in electronic circuits for generating precise timing pulses. In inverter designs, it is configured in astable multivibrator mode to produce a continuous square wave signal serving as the basis for driving MOSFETs, which in turn control the transformer to produce alternating current (AC) output. The frequency of the square wave is determined by external resistors and capacitors connected to the 555 timer, allowing for customization of the inverter's output frequency.

2.2 Transistor and MOSFET Drivers

To amplify the low-power output from the NE555 timer, MOSFETs are employed. For instance, the BC547 transistor is a commonly used NPN transistor in low-power applications. It can be used to switch higher currents to drive the gate of a MOSFET, in this case the IRFZ44, which is a logic-level N-channel MOSFET capable of handling higher currents and voltages. The combination of these components allows for efficient switching and amplification of the signal to drive the transformer effectively.

2.3 Transformer Selection and Function

The transformer plays a crucial role in stepping up the voltage from the DC source to the desired AC output. A 12-0-12V center-tapped transformer is used in the inverter circuit to provide a balanced AC output. The center tap serves as the ground reference, and the two halves of the secondary winding produce the positive and negative halves of the AC waveform.

2.4 Practical Implementations and Performance

Practical implementations of inverter circuits using the NE555 timer IC, BC547 transistor, IRFZ44 MOSFET, and 12-0-12V center-tapped transformer have demonstrated the feasibility of the circuit design.

CHAPTER 3

SYSTEM DESIGN AND ARCHITECTURE

3.1 Hardware Design

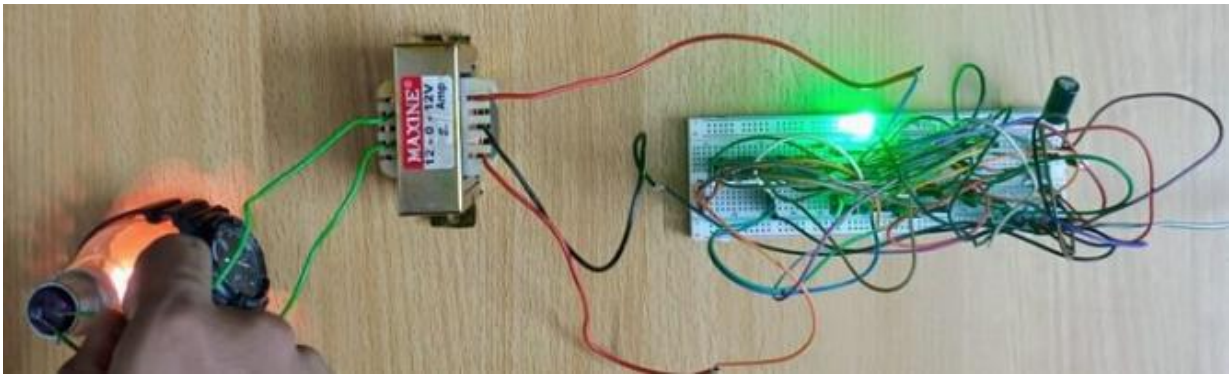

Fig 1: Breadboard Prototype of the Inverter System

3.2 Hardware Required:

1. Power Supply	:	12V 2A Battery
2. Resistors	:	2 x 100Ω, 3 x 10 kΩ, 2 x 1kΩ, 1 x 2.2kΩ, 1 x 15kΩ
3. Capacitors	:	1 x 1 µF, 1 x 1000 µF
4. Semiconductors	:	BC547, NE555 Timer IC, IRFZ44 MOSFET, 5mm LED
5.Transformer	:	12-0-12V Center-Tapped Step-up transformer
5. Miscellaneous	:	Self Designed PCB board, Solar Panel

3.3 Explanation of the Circuit:

The inverter system operates by using the 555 timer IC in astable mode to generate a square wave at a particular frequency of 50 Hz. This square wave is fed as an input voltage to BC547 transistor utilized to switch the MOSFETs, which then alternate the flow of current to the transformer.

The frequency of square wave is determined by the resistors and capacitors connected to the timer integrated circuit. In this case, the 10K and 15K resistors, along with the 1 µF capacitor, define the frequency of the output signal at 50 Hz.

The BC547 transistor operated in Common Emitter Mode amplifies the output signal from the 555 timer and drives the gates of the MOSFETs. This allows for efficient switching of the MOSFETs based on the timer's output signal.

The eight IRFZ44 MOSFETs are arranged in a push-pull configuration to convert the DC voltage into a high-current square wave signal. The MOSFETs possessing a high switching frequency, alternate the current flow through the primary winding of the transformer.

The transformer receives the high-current square wave from the MOSFETs and steps it up to a higher 220V AC voltage. The 12-0-12 V center-tap transformer boosts the 12V DC to approximately 220V AC.

The capacitors are used for filtering and stabilizing the signals, while the resistors limit the current and set the timing intervals. The 1000 µF capacitor smoothens the DC input to prevent ripple from affecting the output.

An LED is connected in the circuit to indicate the operational status of the inverter. It lights up when the circuit is powered and functioning.

CHAPTER 4

SIMULATION AND ANALYSIS

Schematic and Discussion

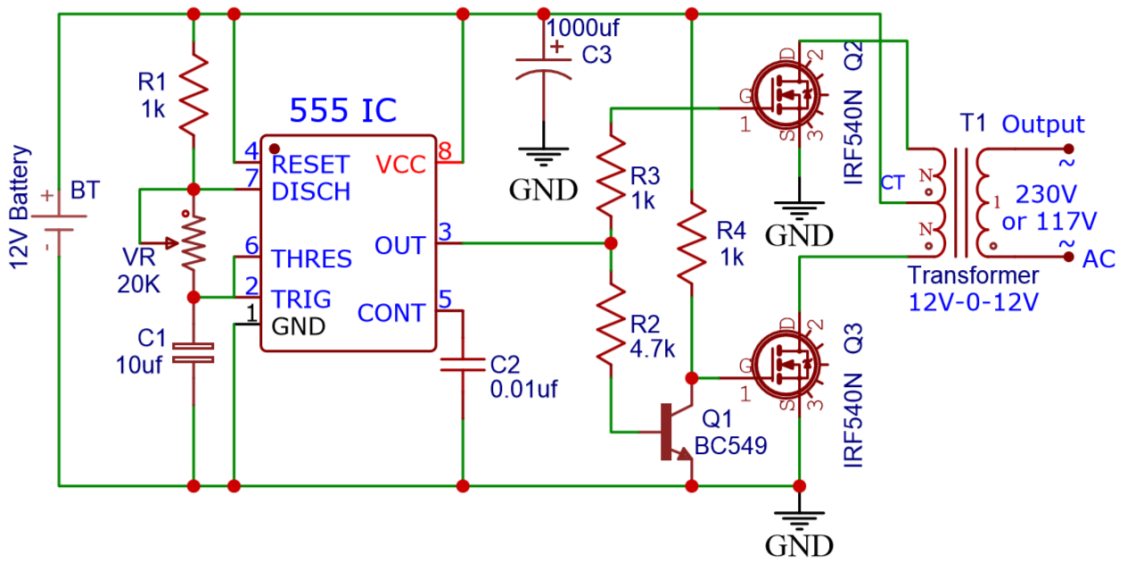

Fig 2: Schematic of the Inverter System

Square Wave Output Discussion

The NE555 timer in astable mode generates a constant frequency square wave (usually 50Hz or 60Hz), which toggles the MOSFETs on and off alternately. This on-off switching drives the center-tapped transformer, creating an alternating voltage at the secondary winding.

The result is a square-shaped AC waveform at the output instead of the smooth sine wave you get from utility power.

CHAPTER 5
RESULTS AND DISCUSSION

The final outcome and result of 500W Inverter system provided us an intriguing interesting observation, understanding and take on how power outages and load shedding are handled in urban and rural places. Main power supply to household circuit is derived from power grid through local substation transformer wiring to a locality but in case of power failure either due to power surge or monsoon season safety precaution or any unforeseen circumstances, even emergency services do not get interrupted, all thanks to modern day Inverter systems. We put to use the knowledge we amassed from Analog Electronics course under Dr. A.V.M Manikandan Sir.

We utilized capacitors to filter and stabilize the signals while resistors were used to limit the current and set the timing interval. We utilized the Common Emitter Mode of the BC547 Transistor to amplify the square wave signal from NE555 Timer IC in astable vibration mode to reach the threshold Gate voltage of the IRFZ44 MOSFET for switching action.

We utilized the IRFZ44 MOSFET due to its high current handling capacity in parallel and it possesses a high switching frequency. The Center-tapped transformer 12-0-12V was a new electronic component to our team but we found it to be two transformers coupled with two of their primary winding wire being considered common to ground.

CHAPTER 6

CONCLUSION

We successfully built the 500W Inverter System. What we set out to create a way to supplement power supply during power outages and power failure worked out well.

We used DC power supply 12V 2A fed to NE555 Timer IC in the astable multi-vibration mode to develop a square wave of frequency 50 Hz to switch on and off 8 x IRFZ44 MOSFETs in push-pull configuration to split square wave into 2 half cycles to feed 12V 2A to 12-0-12V Center-tapped transformer in opposite phase to step-up to 220V AC current.

We came across the power rating of different electronic components so used in this project and its related electrical properties. We utilized IRFZ44 MOSFET for its high switching frequency and high current handling capacity in parallel configuration. We utilized capacitors for filtering and stabilizing the signal preventing ripples in signal input of BC547 transistor while resistors were utilized in biasing of the NE555 Timer IC along with capacitors.

We have implemented 8 MOSFETs, 4 in parallel configuration in each push and pull configuration to handle the high current so drawn from the system. We had planned for a surge protection and voltage stabilization module to follow in line after the Inverter system for future improvisation and implementation.

This project demonstrates how a combination of basic electronic components can bring to life the utility of AC current in everyday life during times of power outages and power failures or on-the-go AC current requirement. It is a reminder of how simple ideas implemented in correct sequence and order can lead to practical solutions as in this Inverter system, a handy tool for AC power supply anytime anywhere.

REFERENCES

1. Boylestad, R.L., & Nashelsky, L. (2013). Electronic Devices and Circuit Theory. Pearson
2. Sedra, A.S., & Smith, K.C. (2014). Microelectronic Circuits. Oxford University Press.
3. Tocci, R.J., Widmer, N.S., & Moss, G.L. (2010). Digital Systems: Principles and Applications. Pearson.
4. Floyd, T.L. (2017). Electronic Devices (Conventional Current Version). Pearson.
5. Horowitz, P., & Hill, W. (2015). The Art of Electronics. Cambridge University Press.
6. Rashid, M.H. (2013). Power Electronics: Circuits, Devices and Applications. Pearson.
7. Malvino, A.P., & Leach, D.P. (2006). Digital Principles and Applications. McGraw-Hill.
8. Gupta, J.B. (2010). Electronic Devices and Circuits. Katson Publishing House.
9. Mehta, V.K., & Mehta, R. (2016). Principles of Electronics. S. Chand Publishing.
10. Kumar, A. (2013). Fundamentals of Digital Circuits. PHI Learning.
11. Theraja, B.L., & Theraja, A.K. (2005). A Textbook of Electrical Technology. S. Chand.
12. Kalsi, H.S. (2018). Electronic Instrumentation. McGraw-Hill Education.
13. Millman, J., & Halkias, C.C. (2011). Integrated Electronics. McGraw-Hill Education.
14. Agarwal, A., & Lang, J. (2005). Foundations of Analog and Digital Electronic Circuits. Morgan Kaufmann.
15. Rajput, R.K. (2006). Basic Electrical and Electronics Engineering. Laxmi Publications.

CONTRIBUTIONS TO THE PROJECT WORK

S. No.	Phase	Description	Responsibility*
1.	Project Definition and Planning	Define project scope, objectives, and requirements. Assess feasibility. Create a project plan.	Sourodeep, Pranav
2.	Conceptual Design and Ideation	Brainstorm and create a conceptual design. Explore different approaches and architectures.	Sourodeep
3.	Detailed Design and Component Selection	Select specific components. Create detailed schematics. Create detailed schematics, layout designs, and circuit diagrams. Choose appropriate simulation tools for testing and validation.	Pranav, Sathwik
4.	Simulation and Testing	Simulate the circuit using software tools (Keil, Proteus). Validate the design.	Sathwik
5.	PCB Design and Layout *(If applicable)*	Design the printed circuit board (PCB) layout using software tools. Ensure signal integrity.	Sourodeep
6.	Prototyping and Fabrication *(If applicable)*	Build a physical PCB prototype. Fabricate the board (etching, drilling, soldering). Verify that the prototype matches the design specifications.	Pranav, Sathwik
7.	Integration and Assembly	Integrate PCB with other hardware components. Assemble the complete system.	Sourodeep, Sathwik
8.	Functional Testing and Debugging	Thoroughly test the integrated system. Debug issues (hardware or software).	Sourodeep
9.	Documentation and Reporting	Maintain detailed documentation (design files, schematics, project reports).	Pranav
10.	Presentation Slides/Posters	Prepare the presentation slides and/or posters for demonstration.	Sathwik
11.	Demonstration	Showcase the project to peers and instructors. Explain design choices and demonstrate the prototype.	Sourodeep, Pranav, Sathwik

* specify ‘Name(s) of the individual’